OPTIONAL EQUIPMENT: Reclinable trellis jib 7.3 / 13 m

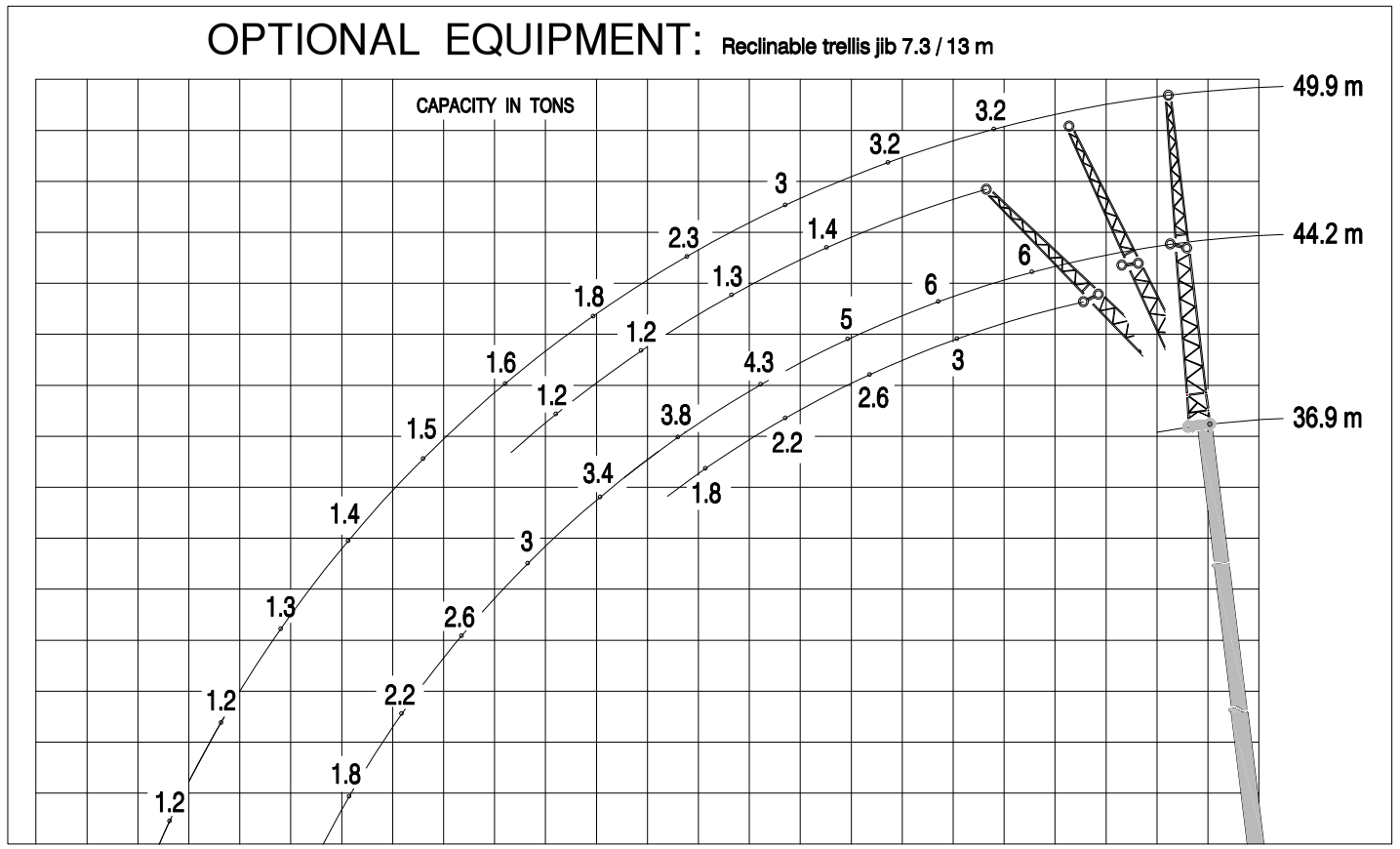

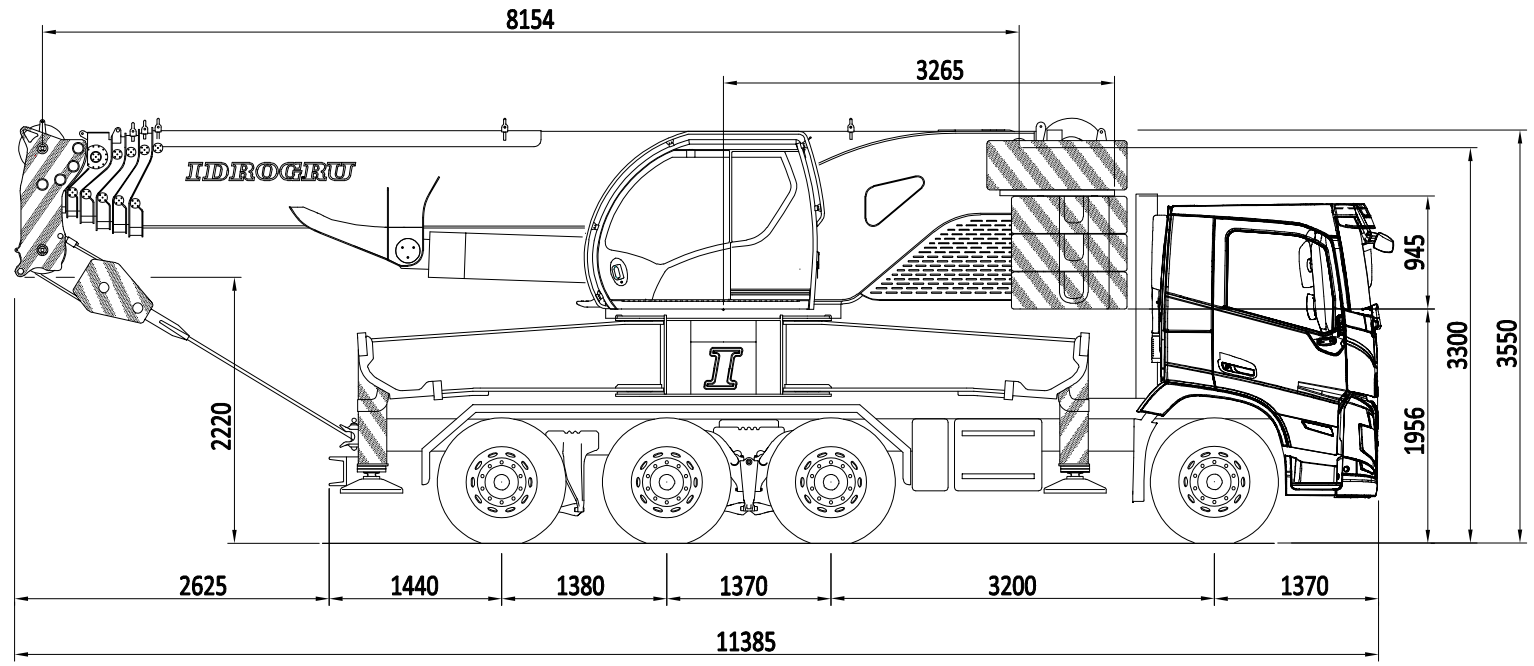

Divisible counterweight with automatic unloading

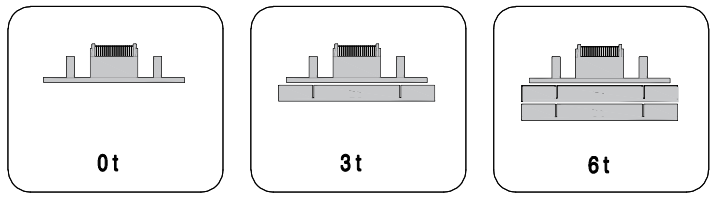

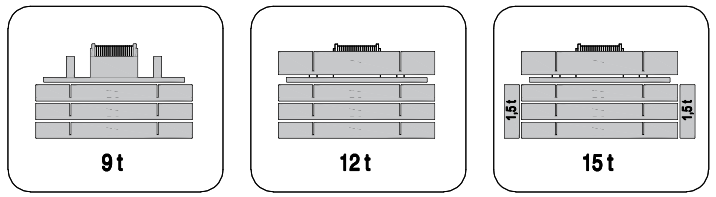

Three position reclinable boom head

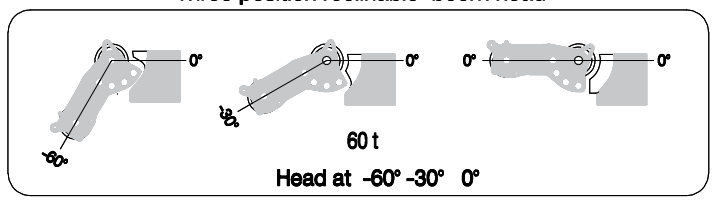

Primary winch

- rope d.18 - rope pull 6,7 t
- volume per revolution (cm3) 140 (max) -70 (min)
- max line pull at 1st layer (m/min) 45 - 90
- max line pull at last layer (m/min) 64 - 129

Double winch

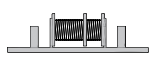

- rope d.18 - rope pull 6,7 t
- rope d.14 - rope pull 4 t
- volume per revolution (cm3) 63 140 (max) - 93 (min)
- max line pull at 1st layer (m/min) 97 70.1 - 105.5
- max line pull at last layer (m/min) 141.9 99.9 - 150,4

1,5 meters hook or pulley for reclinable boom head -60° -30° - 0°

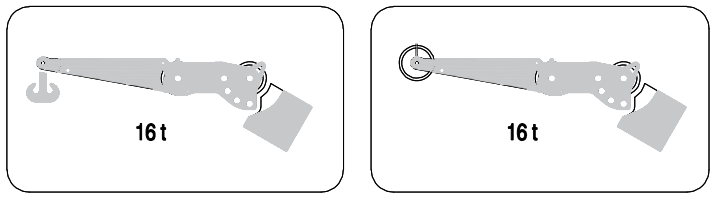

0,5 meters hook for reclinable boom head at -60° -30° 0°

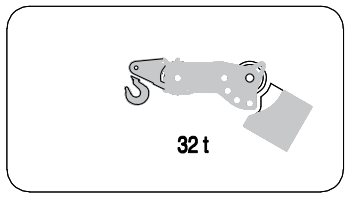

Hook blocks of various capacities

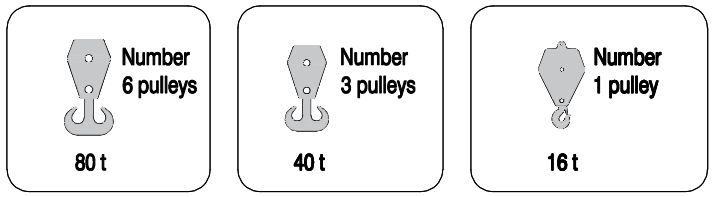

3 meters trellis jib

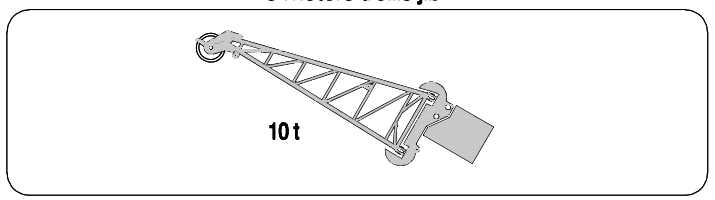

3,7 meters lift spreader beams

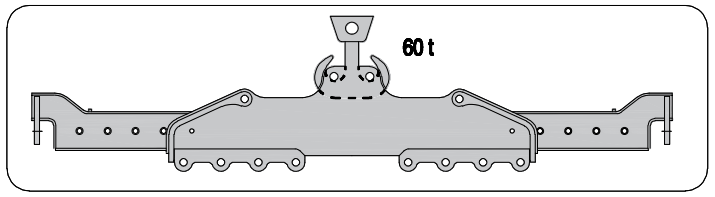

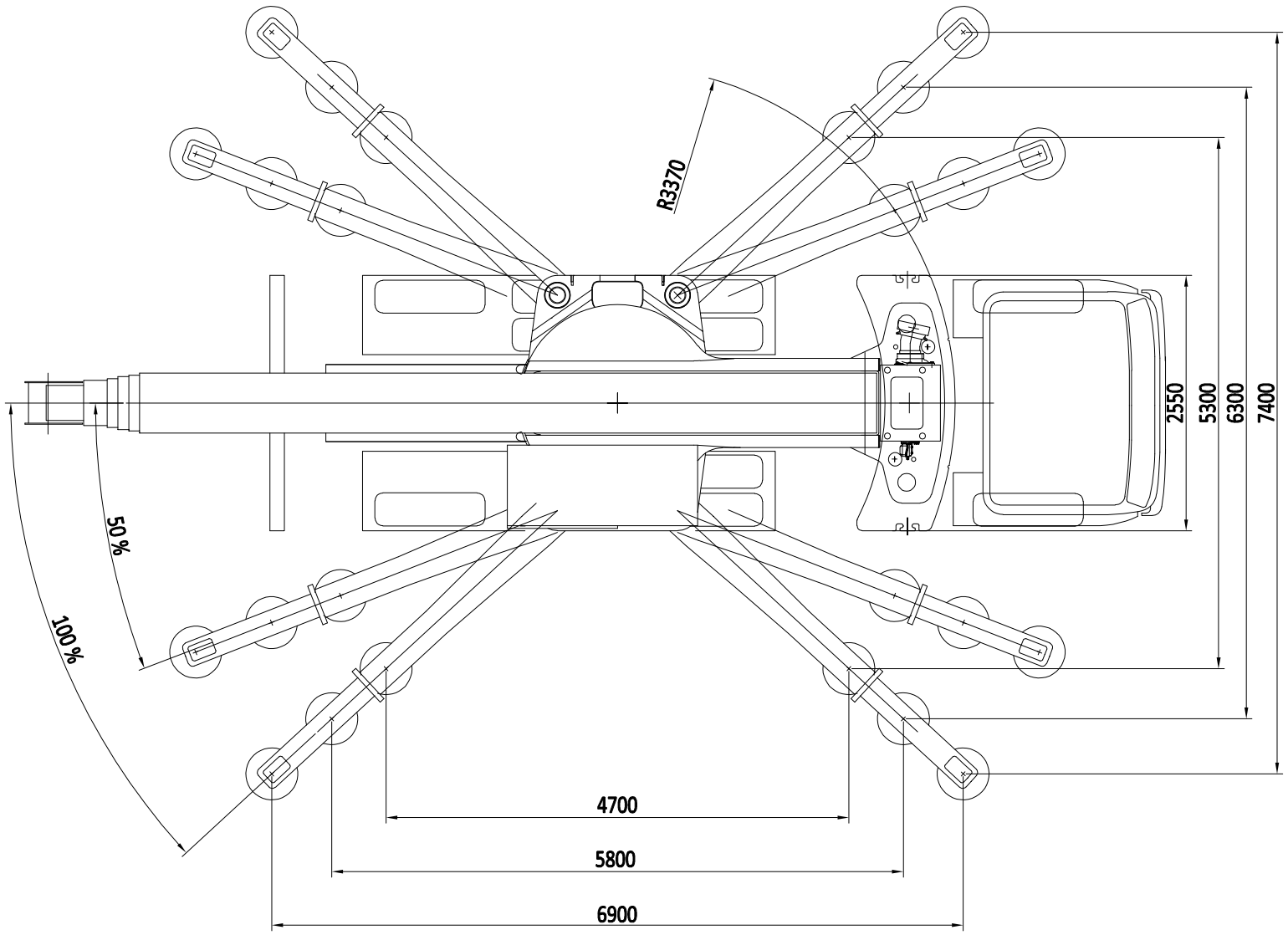

The lifting capacities in the structural area are based on DIN 15018 part 3 / FEM 5.004 / EN 13000.
The lifting capacities in the stability area are based on DIN 15019 part 2 / ISO 4305 / EN 13000

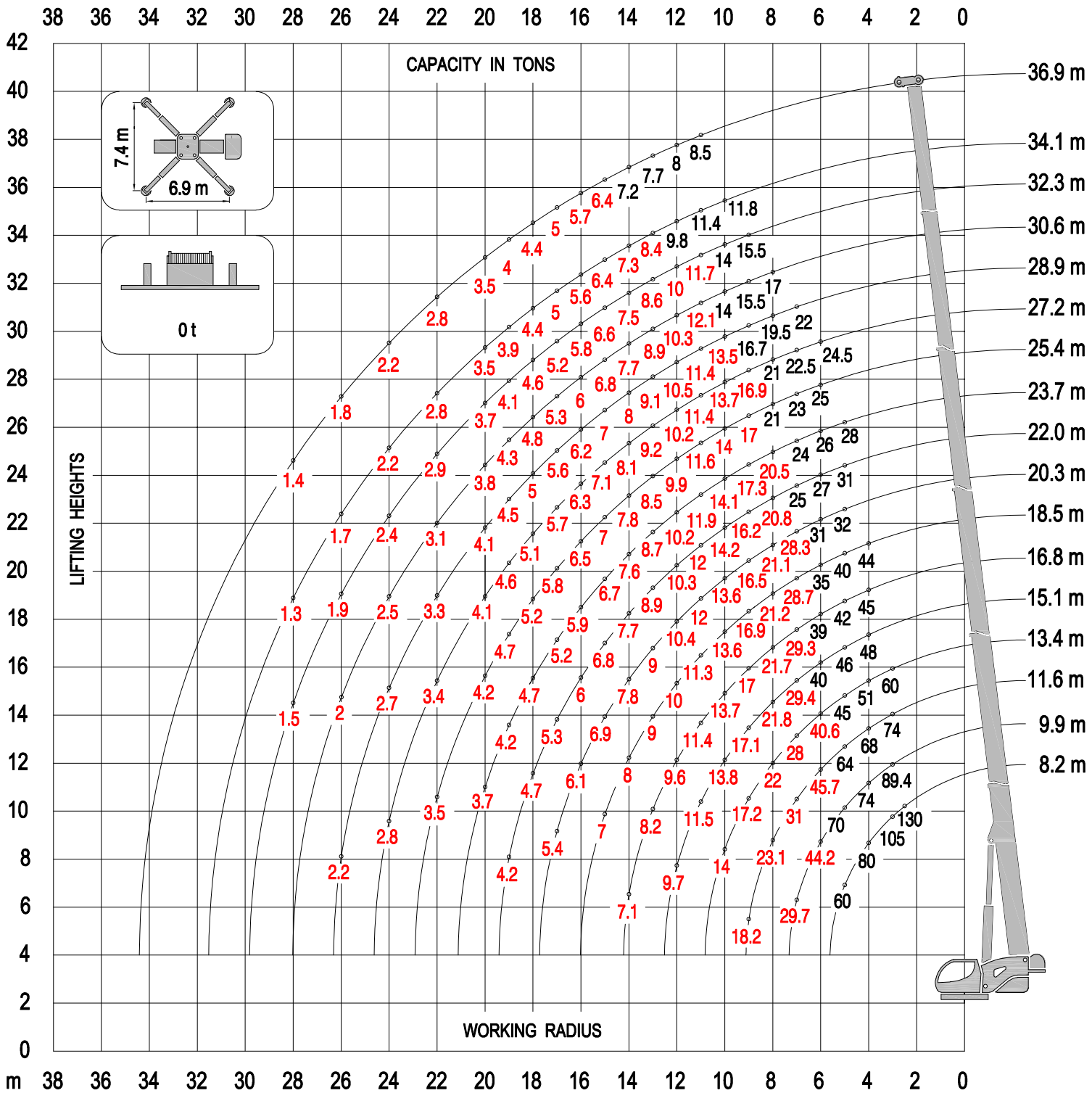
CAPACITY IN TONS
LIFTING HEIGHTS
WORKING RADIUS
7.4 m
6.9 m
0 t
36.9 m
34.1 m
32.3 m
30.6 m
28.9 m
27.2 m
25.4 m
23.7 m
22.0 m
20.3 m
18.5 m
16.8 m
15.1 m
13.4 m
11.6 m
9.9 m
8.2 m

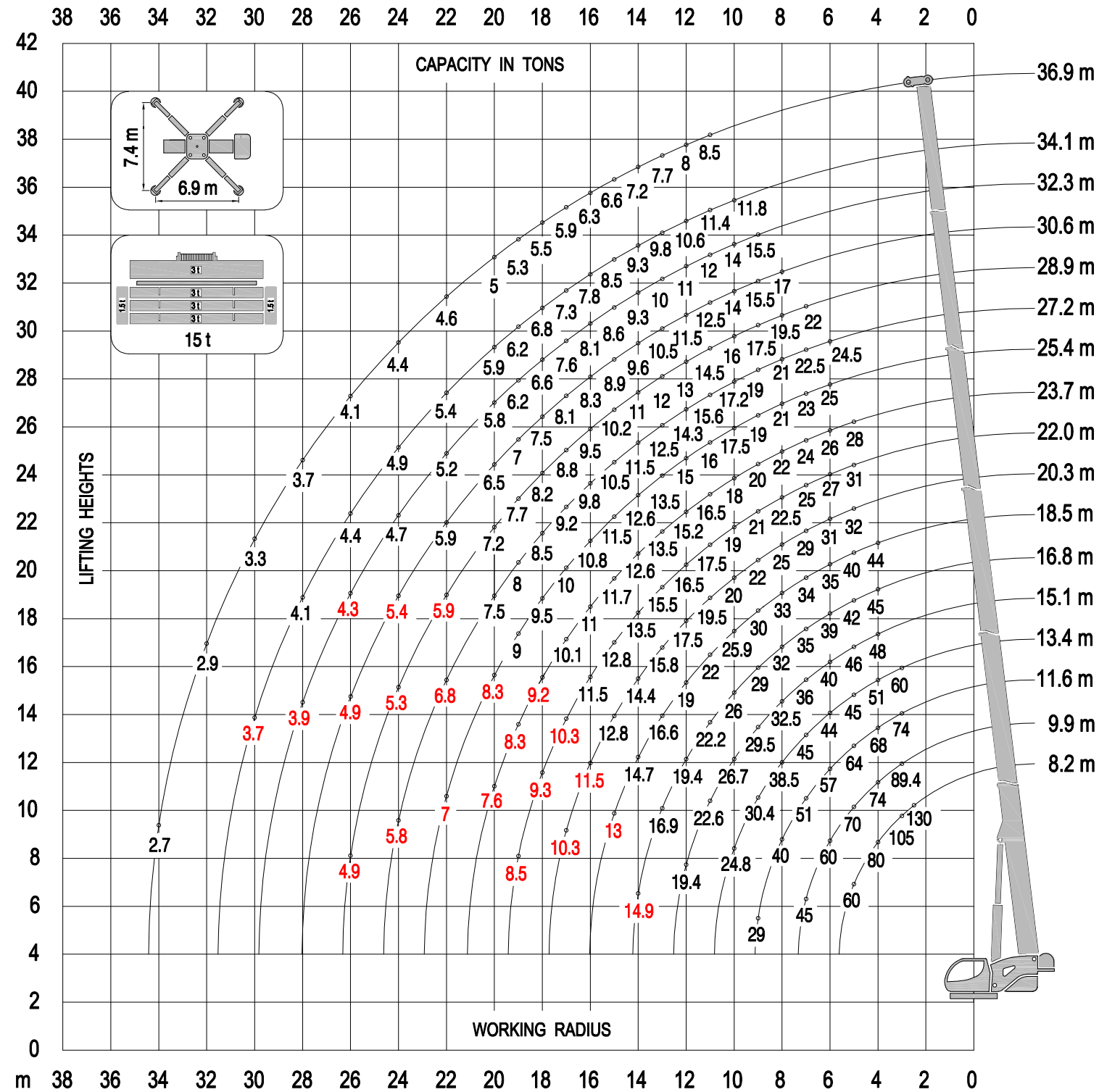
CAPACITY IN TONS
LIFTING HEIGHTS
WORKING RADIUS
7.4 m
6.9 m
15 t
36.9 m
34.1 m
32.3 m
30.6 m
28.9 m
27.2 m
25.4 m
23.7 m
22.0 m
20.3 m
18.5 m
16.8 m
15.1 m
13.4 m
11.6 m
9.9 m
8.2 m